Brilliant
THE JEWEL IN LIGHTING

Riley WA
42382...
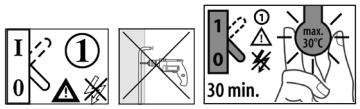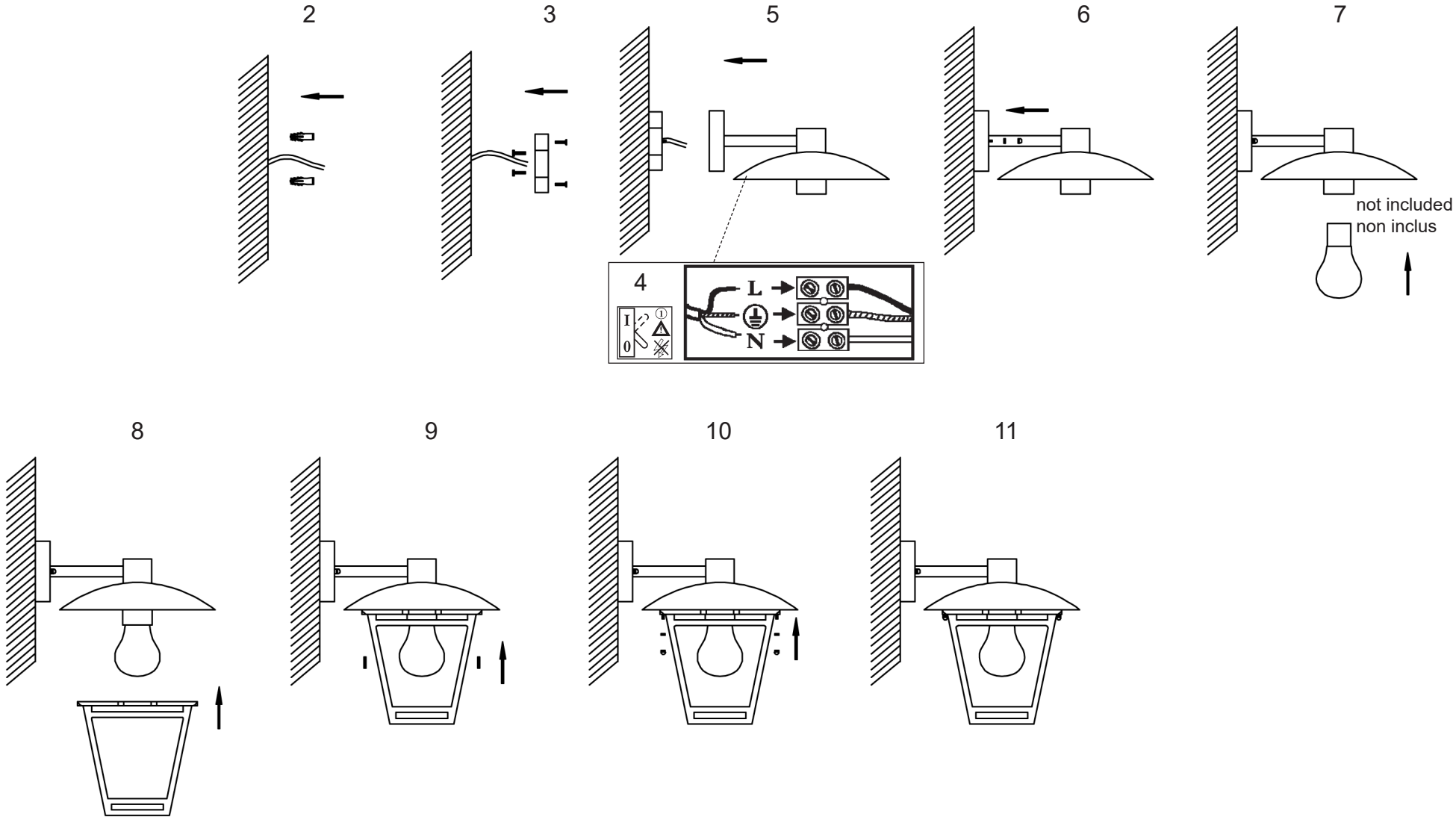
10.15